SUMMIT

5P SHAKER
CLEAR PINE

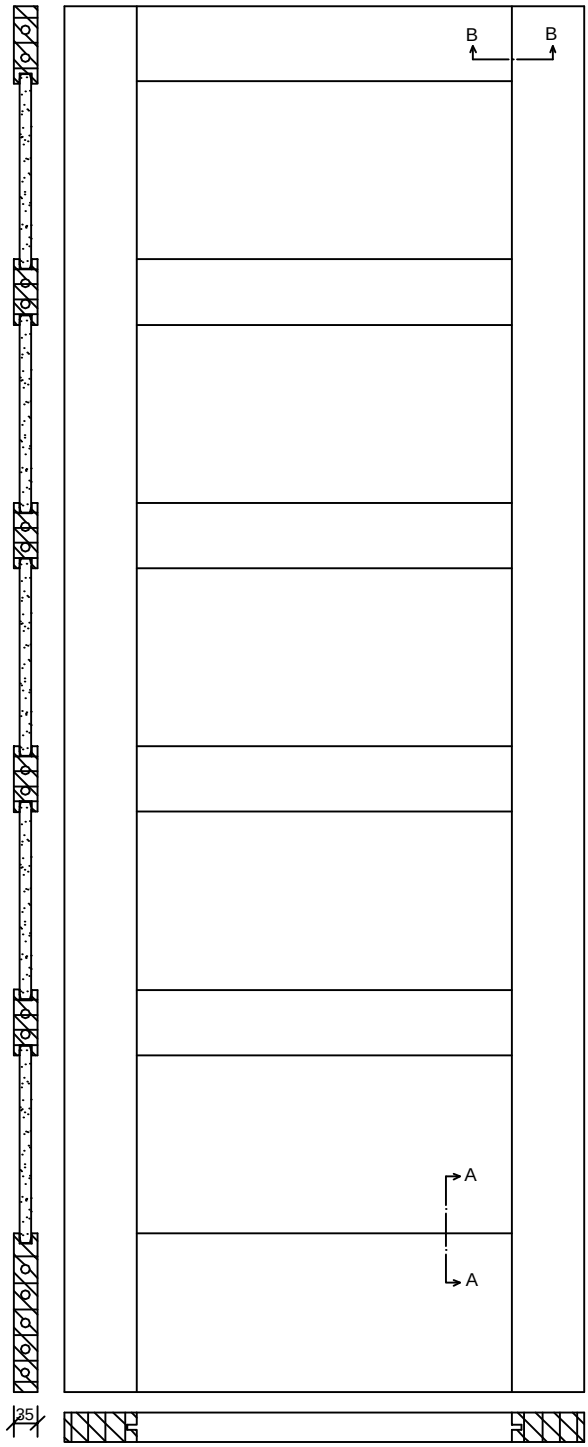

110	110	161	
256	261	261	
96	96	96	
256	261	261	
96	96	96	
256	261	261	
96	96	96	
256	261	261	
96	96	96	
256	261	261	
233	233	284	
79" - 2007mm	80" - 2032mm	84" - 2134mm	

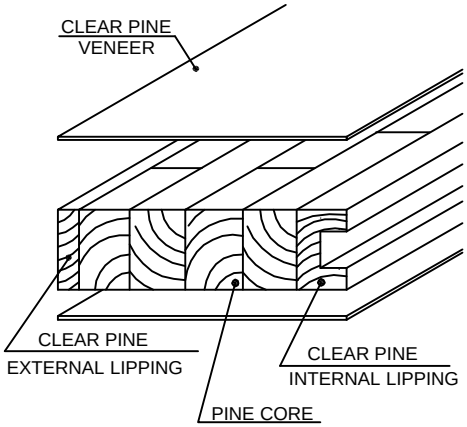

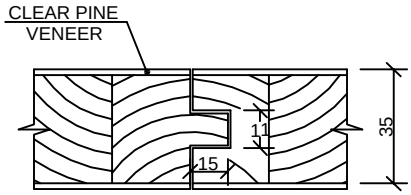

B-B

FLAT PANEL
CLEAR PINE VENEER
OVER MDF CORE

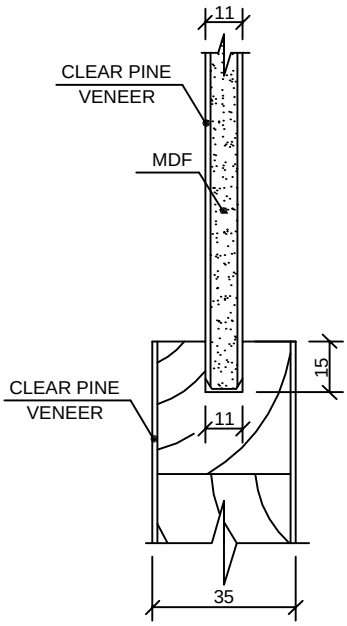

A-A

11 13/16" - 300mm	60	180	60
14 13/16" - 376mm	60	256	60
17 13/16" - 452mm	60	332	60
12"- 305mm	62	181	62
14"- 356mm	88	180	88
16"- 406mm	113	180	113
18"- 457mm	113	231	113
20"- 508mm	113	282	113
22"- 559mm	113	333	113
24"- 610mm	113	384	113
26"- 660mm	113	434	113
28"- 711mm	113	485	113
30"- 762mm	113	536	113
32"- 813mm	113	587	113
34"- 864mm	113	638	113
36"- 914mm	113	688	113

Dimensions in millimeters

SUMMIT

5P SHAKER
CLEAR PINE

Date - 31/10/08